Bosch Climate 5000 Series
Four Way Cassette Indoor Unit

BMS500-AAU024-1AHCXC | BMS500-AAU036-1AHCXC

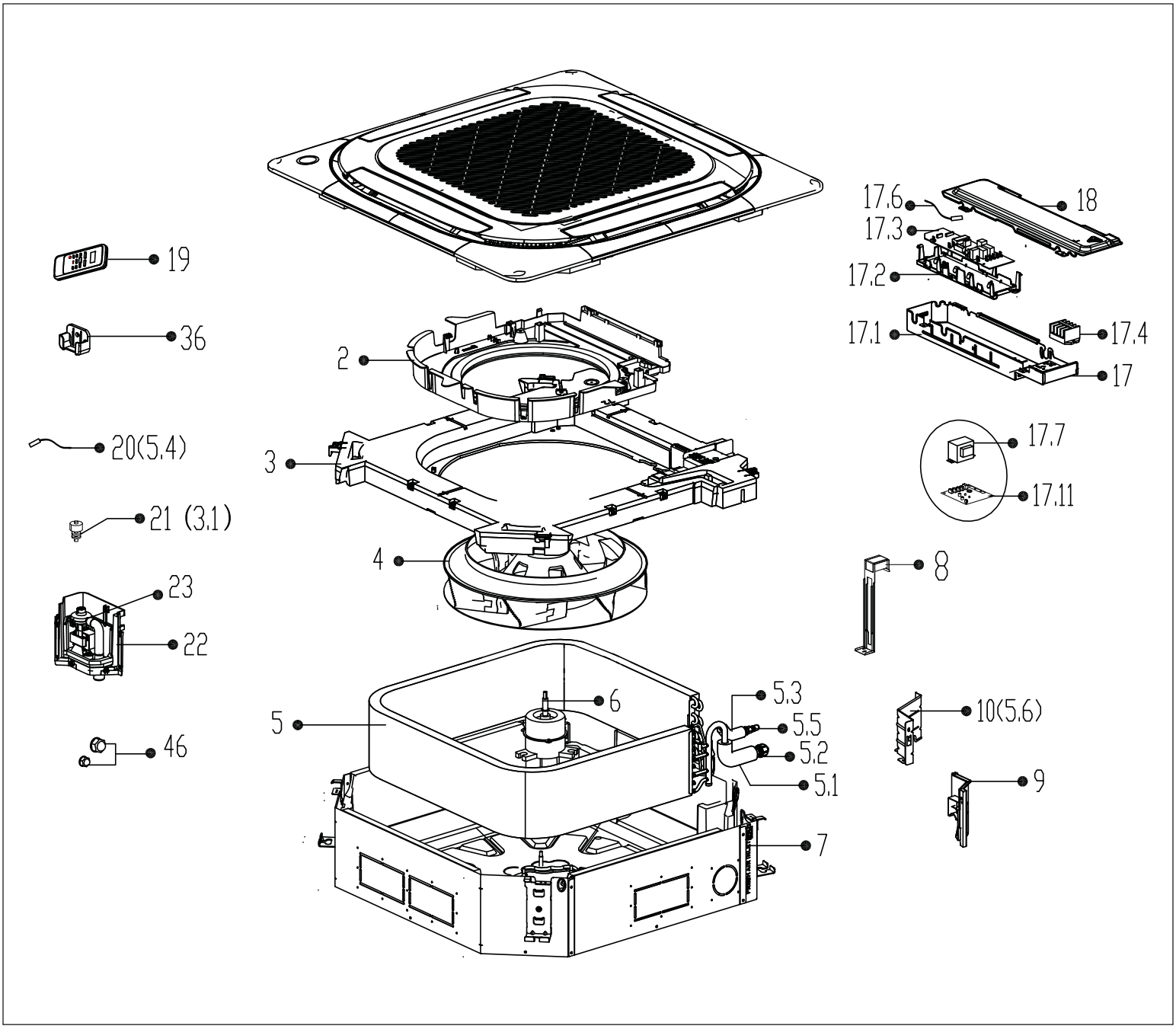

Bosch Thermotechnology Corp.
Tel: 1-866-642-3198 Fax: 1-603-965-7581
www.bosch-thermotechnology.us

Pos.	Description	Qty	BMS500-AAU024-1AHCXC	BMS500-AAU036-1AHCXC	Recommended Stock	Remarks
2	Ventilation ring	1.0	8733956774	8733956774	✓	
3	Water collector subassembly	1.0	8733956754	8733956754	✓	
3.1	Water Level Switch	1.0	8733956755	8733956755	✓	
4	centrifuge fan	1.0	8733956780	8733956775	✓	
5	Evaporator Assembly	1.0	8733956781	8733956776		
5.1	Evaporator outlet pipe subassembly	1.0	8733956782	8733956777		
5.2	Pipe Nut	1.0	8733953964	8733953964		
5.3	Evaporator inlet pipe subassembly	1.0	8733956783	8733956778		
5.5	Detection valve	1.0	8-733-953-651	8-733-953-651		
6	Brushless DC Motor	1.0	8733956784	8733956760	✓	
7	Chassis assembly	1.0	8733956785	8733956779	✓	
8	Evaporator fixing hanger	1.0	8-733-953-556	8-733-953-588		
9	Pipe fixing board subassembly	1.0	8733956762	8733956762		
10	Evaporator fixing board subassembly	1.0	8733956786	8733956759		
17	Electronic control box subassembly	1.0	8733956787	8733956763	✓	
17.1	Metal box	1.0	8733956764	8733956764		
17.2	Insulation plate	1.0	8733956765	8733956765		
17.3	Main control board	1.0	8733956788	8733956766	✓	
17.4	Wire joint	1.0	8733956789	8733954009		
17.6	Room temperature sensor	1.0	8-733-953-738	8-733-953-738		
17.7	Reactor	1.0	8733956790	8733956767	✓	
17.11	Humidity sensor subassembly	1.0	8733956768	8733956768	✓	
18	Cover of electronic control box	1.0	8733956769	8733956769		
19	Remote controller	1.0	8733956791	8733956791	✓	
20	Pipe Temperature Sensor	1.0	8733956770	8733956770	✓	
22	External water pump box assembly	1.0	8733956771	8733956771	✓	
23	Induction pump	1.0	8733956772	8733956772	✓	
36	Bracket of remote Controller	1.0	8733956773	8733956773		
46	Copper nut	1.0	8-733-953-585	8-733-953-585		
46	Copper nut	1.0	8-733-953-586	8-733-953-586		
24	Drain pump washer assembly	3.0	8-733-953-582	8-733-953-582		
25	Drain pipe	1.0	8-733-953-583	8-733-953-583		
26	Water pipe	1.0	8-733-953-584	8-733-953-584		
42	Copper nut	1.0	8-733-953-585	8-733-953-585		
43	Copper nut	1.0	8-733-953-586	8-733-953-586		
44	Cassette Grille for 24K ~ 48K models	1.0	8-733-953-126	8-733-953-126		

BMS500-AAU024-1AHCXC | BMS500-AAU036-1AHCXC