KOHLER. Faucets

Simplice®

Widespread bathroom sink faucet, 1.2 gpm

K-27390-4

Features

- Two lever handles offer separate control of hot and cold water
- 5-1/8" (130 mm) spout reach
- 1.2 gpm (4.5 lpm) maximum flow rate at 60 psi (4.14 bar)
- UltraGlide® valves with dry-stem technology are designed to eliminate common leak paths and provide smooth, effortless control
- Clicker drain with tailpiece and overflow
- Coordinates with other products in the Simplice collection

Material

- Premium material construction for durability and reliability
- KOHLER finishes resist corrosion and tarnishing

Installation

- For 8" - 16" (203 - 406 mm) centers
- Deck-mount
- Handles are preassembled on valves to simplify installation
- Quick-connect fittings make installation easy

Water Conservation & Rebates

- This product can help a building earn Water Efficiency points in LEED® Green Building Rating System

Recommended Products/Accessories

K-23726 Drain treatment
K-23723 Faucet cleaner
K-27393 18" towel bar
K-27394 24" towel bar
K-27395 Robe hook
K-27396 Towel arm
K-27397 Pivoting toilet paper holder

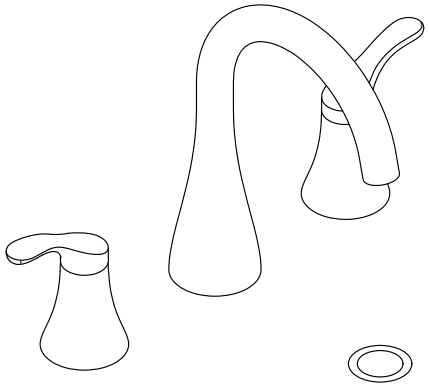

WaterSense Meets EPA Criteria Certified by IAPMO R&T

ADA	CSA B651	OBC

Codes/Standards

ASME A112.18.1/CSA B125.1
NSF/ANSI/CAN 61
NSF/ANSI/CAN 372
All applicable US Federal and State material regulations
DOE - Energy Policy Act 1992
EPA WaterSense®
California Energy Commission (CEC)
ADA
ICC/ANSI A117.1
CSA B651
OBC

KOHLER® Faucet Lifetime Limited Warranty

See website for detailed warranty information.

Available Colors/Finishes

Color tiles intended for reference only.

Color	Code	Description
	CP	Polished Chrome
	BN	Vibrant® Brushed Nickel
	BL	Matte Black

KOHLER Faucets

Simplice®

Widespread bathroom sink faucet, 1.2 gpm

K-27390-4

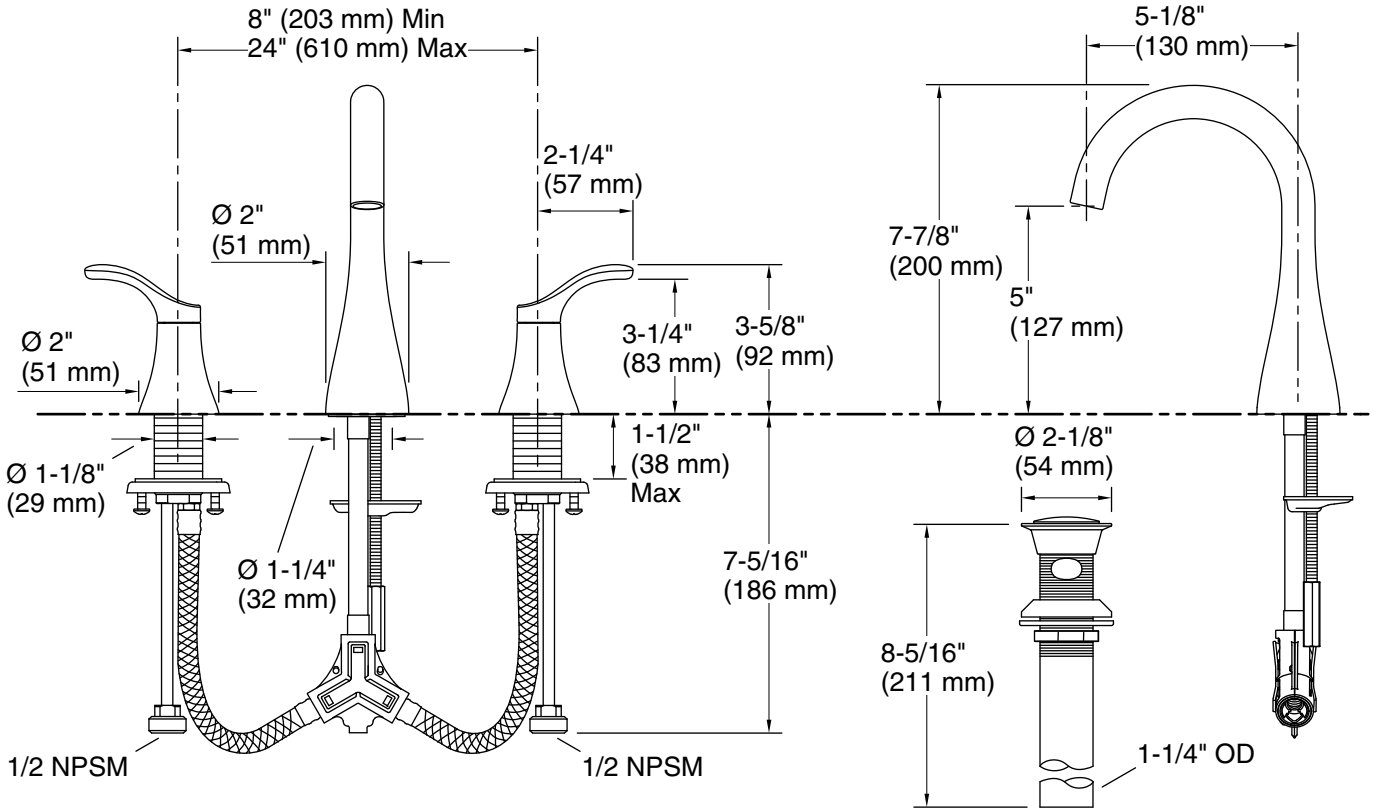

Technical Information

All product dimensions are nominal.

Faucet:

Flow rate:	1.2 gal/min (4.5 l/min)
Pressure:	20 psi (1.4 bar)
Drain included:	Yes
Drain with overflow:	Yes

Spout:

Spout reach:	5-1/8" (130 mm)

Notes

Install this product according to the installation instructions.

ADA, OBC, CSA B651 compliant when installed to the specific requirements of these regulations.