KOHLER. Faucets

Graze®

Pull-down kitchen sink faucet with three-function sprayhead

K-22062

Features

- Three-function pull-down sprayhead with touch-control allows you to switch between stream, Sweep® spray and BerrySoft® spray
- Sweep® spray features specially angled nozzles that form a wide, powerful blade of water to sweep your dishes and sink clean
- Unique three-function sprayhead allows you to tackle tasks such as cleaning, rinsing and filling with Sweep® Spray, BerrySoft® spray, and aerated stream
- ProMotion® technology's light, quiet braided hose and swiveling ball joint make the pull-down sprayhead easier and more comfortable to use
- High-arch 270˚ rotating swing spout offers vertical clearance for tall cookware and pitchers
- 10-3/4" (273 mm) swing spout reach
- 1.5 gpm (5.7 lpm) maximum flow rate at 60 psi (4.14 bar)
- Single lever handle makes adjusting water temperature easy.
- Temperature memory allows faucet to be turned on and off at the temperature set during prior usage
- MasterClean™ sprayface features an easy-to-clean surface that withstands mineral buildup
- KOHLER® ceramic disc valves exceed industry longevity standards for a lifetime of durable performance
- DockNetik® secure docking system locks sprayhead into place when not in use

Material

- Premium metal construction for durability and reliability
- KOHLER® finishes resist corrosion and tarnishing

Installation

- Deck-mount
- Single-hole installation (three-hole escutcheon sold separately)
- Flexible supply lines simplify installation

Adapters, Rough-in and Extension Kits

1012715	Range: 2-1/2" (64 mm) - 4-5/8" (118 mm)

Optional Products/Accessories

K-22071 Three-hole kitchen faucet escutcheon

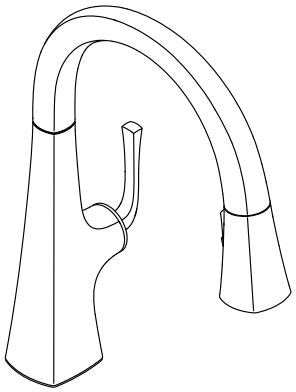

ADA | **CSA B651**

Codes/Standards

ASME A112.18.1/CSA B125.1
NSF/ANSI/CAN 61
NSF/ANSI/CAN 372
All applicable US Federal and State material regulations
DOE - Energy Policy Act 1992
California Energy Commission (CEC)
ADA
ICC/ANSI A117.1
CSA B651

KOHLER® Faucet Lifetime Limited Warranty

See website for detailed warranty information.

Available Colors/Finishes

Color tiles intended for reference only.

Color	Code	Description
	VS	Vibrant® Stainless
	BL	Matte Black
	2MB	Vibrant® Brushed Moderne Brass

KOHLER Faucets

Graze®

Pull-down kitchen sink faucet with three-function sprayhead

K-22062

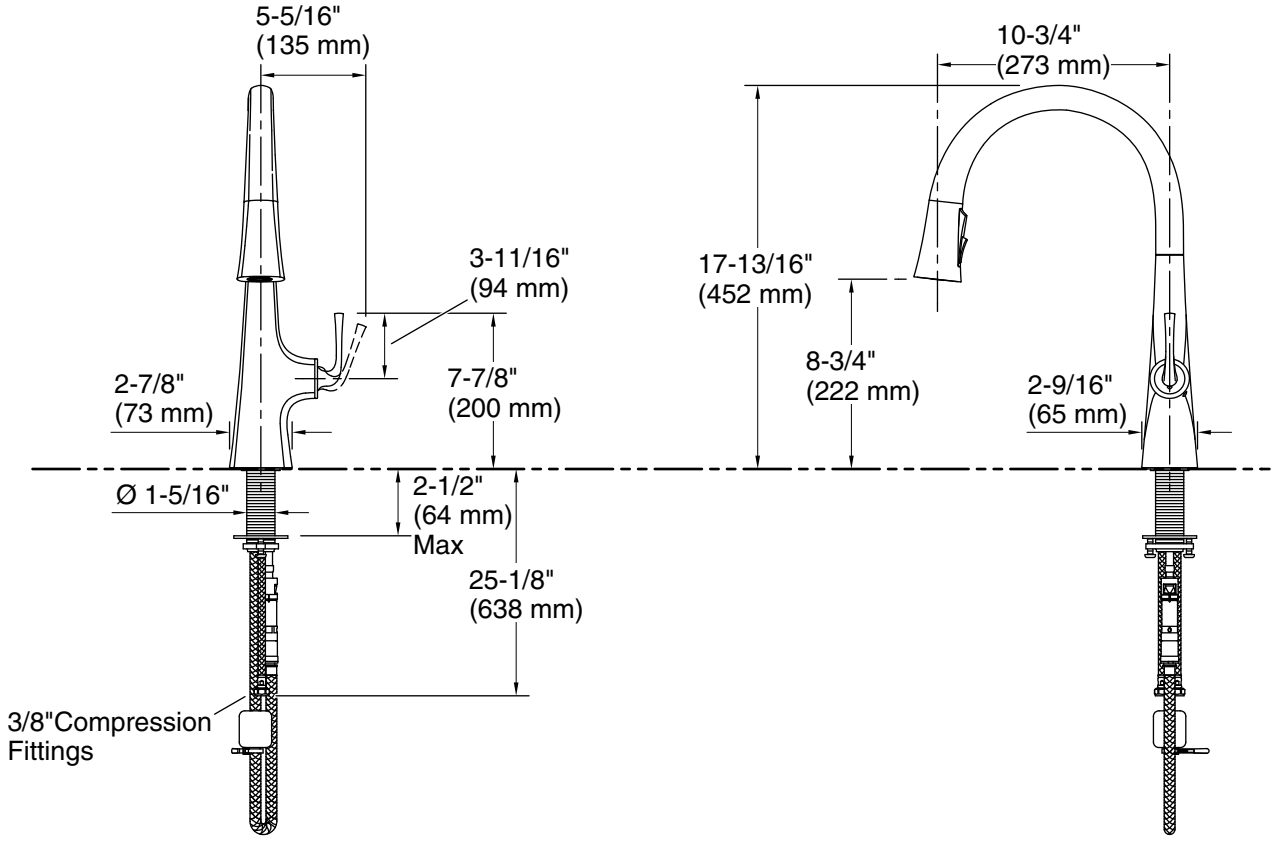

Technical Information

All product dimensions are nominal.

Drain included: No

Spout:

Spout reach: 10-3/4" (273 mm)

Notes

Install this product according to the installation instructions.

ADA complaint for faucet handles only.

ADA, CSA B651 compliant when installed to the specific requirements of these regulations.