Replacement parts

WARNING Replacement parts must be purchased through a local WM Technologies distributor. When ordering, specify boiler model and size and include description and part number of replacement part. Results from using modified or other manufactured parts will not be covered by warranty and may damage boiler or impair operation.

NOTICE Weil-McLain part numbers are found in Weil-McLain Boilers and Controls Repair Parts Lists.

WARNING **The boiler contains ceramic fiber materials**. Use care when handling these materials per instructions on page 109 of this manual. Failure to comply could result in severe personal injury.

Reinstall boiler door after startup or servicing

WARNING Inspect boiler door gaskets and reinstall boiler door after start or servicing. The boiler door must be securely fastened to the boiler to prevent boiler from drawing air from inside the boiler room. This is particularly important if the boiler is located in the same room as other appliances. Failure to keep the door securely fastened could result in severe personal injury or death.

Figure 129 Propane conversion kits and instructions

WARNING The conversion kits listed below are only for use with Ultra Series 4 boilers. For series 1 or series 2 boilers, refer to the boiler manual or contact WM Technologies for the correct parts.

Natural to propane conversion — **SERIES 4 BOILERS ONLY** *(not required for Ultra-399 — adjustment is made with throttle screw, not with orifice)*							
Sea level (to 5,500 feet altitude)				**High altitude (above 5,500 feet)**			
Model	**Kit part #**	**Kit location**	**Instructions**	**Model**	**Kit part #**	**Kit location**	**Instructions**
Ultra-80	383-501-020	**SPECIAL ORDER**	⚠ In kit only	**Ultra-80LP**	383-500-644	**SPECIAL ORDER**	See page 48 or kit
Ultra-105	540-100-001 Supplied with boiler		See page 48	**Ultra-105**	383-500-645	**SPECIAL ORDER**	See page 48 or kit
Ultra-155	383-500-115 Supplied with boiler		See page 49	**Ultra-155**	383-500-646	**SPECIAL ORDER**	See page 49 or kit
Ultra-230	383-500-120 Supplied with boiler		See page 49	**Ultra-230**	383-500-647	**SPECIAL ORDER**	See page 49 or kit
Ultra-299	540-202-832 Supplied with boiler		See page 49	**Ultra-299**	383-500-394	**SPECIAL ORDER**	See page 49 or kit
Propane to natural conversion							
-80	383-501-021	**SPECIAL ORDER**	⚠ In kit only	Contact factory			

⚠ Boilers marked with this symbol require special installation procedures. Do not use the instructions in this manual — use only the instructions supplied in the conversion kit.

Replacement parts *(continued)*

Figure 130 Miscellaneous parts and kits

Description			Part Number
CHEMICALS			
Antifreeze, aluminum-safe, Sentinel X500 (1 gallon)			592-900-029
Antifreeze, aluminum-safe, Sentinel X500 (5 gallon)			592-900-006
Corrosion inhibitor, Sentinel X100 (one tube, 275 ml)			592-900-002
Inhibitor quick-test kit.			592-900-005
BOILER ACCESSORIES AND CONTROLS			
Boiler circulator, without flanges	Ultra-80/105	Taco Model 007e ECM	511-405-153
	Ultra-80/105	Taco Model 007	511-405-113
	Ultra-155/230/299	Taco Model 0014	511-405-133
	Ultra-399	Taco Model 0013	511-405-140
Circulator hardware kit – inlet (1 flange, 2 nuts, 2 screws, and 1 gasket)			
	1”		381-354-525
	1¼”		381-354-526
	1½”		381-354-531
Low water cut-off with test button			511-100-005
Heat exchanger cleaning tool			591-706-200
Annual maintenance kit (Igniter, igniter gasket, cover plate gasket, cover plate insulation, burner gasket, flue sensor gasket and venturi gasket)	Ultra-80/105		383-500-605
	Ultra-155 – 399		383-500-620
Pressure relief valve, ASME 30 PSI, 3/4” NPT male	Ultra-80 – 299		383-500-095
	Ultra-80 – 399		511-546-921
Pressure/Temperature gauge, Short Shank 3.12-Inch Diameter 1/4 NPT			510-218-099
Ultra boiler wall-mount kit			389-900-180
VENT / AIR TERMINATIONS			
Vent/air termination wall penetrate cover plate (2 are shipped with each boiler)			383-500-100
Vent termination bird screen (2 are shipped with each boiler)	3” vent - Ultra-80/105/155		383-500-105
	4” vent - Ultra-230/299/399)		383-500-110
Weil-McLain sidewall vent/air cap termination kit — Includes W-M sidewall vent/air termination cap, inside and outside cover plates, and mounting hardware; openings are sized for PVC pipe.			
	3” kit - Ultra-80 – 155		383-500-397
	4” kit - Ultra-230 – 399		383-500-398
Weil-McLain Flue Pipe & Adapter kits — Includes bracket pipe flue, adapter air Inlet, adapter flue pipe, clamp pipe flue, mounting hardware and Instructions:			
	70mm kit - Ultra-80/105		383-500-770
	80mm kit - Ultra-155		383-500-771
	100mm kit - Ultra-230-399		383-500-772
Concentric vent kit (for sidewall or vertical termination)	3” PVC only		383-500-350
Concentric vent kit (for sidewall or vertical termination)	4” PVC only		383-900-075
CONDENSATE HANDLING			
Condensate neutralizer kit			383-500-631

Go to www.weil-mclain.com to locate WM Technologies distributors

Replacement parts *(continued)*

Figure 131 Jacket parts

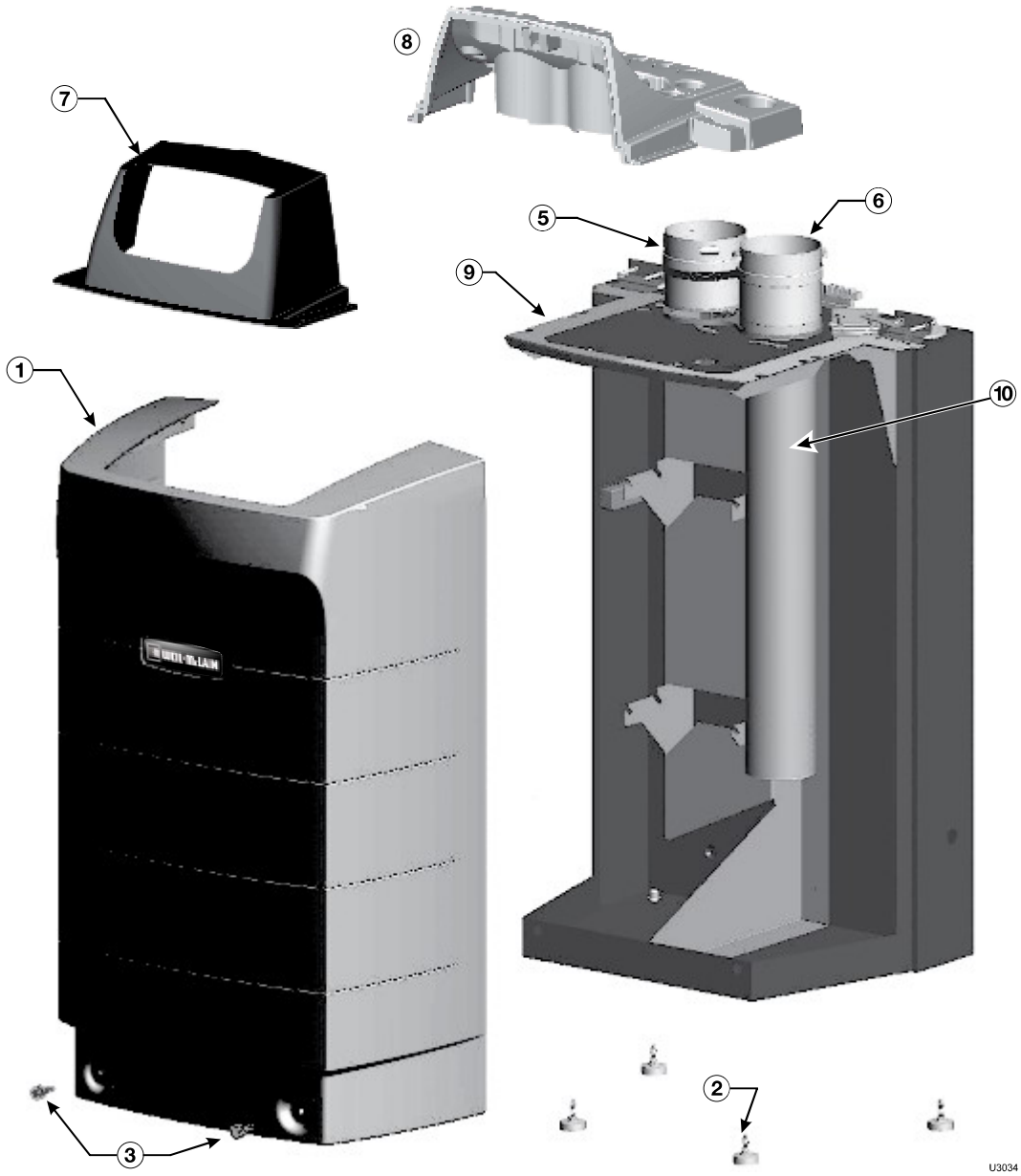

Item	Description		Boiler models	Part number
1	Boiler door (Slate gray)		All	383-500-136
2	Boiler leg kit (4 required)		All	383-500-065
3	Screw flat head slotted 17 Series for jacket front door (2 required)		All	562-650-126
4	Screw clip-on receptacle (not shown) (2 required)		All	383-500-180
5	Air inlet pipe adapter	3”	80/105	560-907-704
		3”	155	560-907-707
		4”	230–399	560-907-710

Item	Description		Boiler models	Part number
6	Flue outlet pipe adapter	3”	80/105	560-907-771
		3”	155	560-907-771
		4”	230–399	560-907-773
7	Top cover, front		All	383-500-607
8	Top cover, rear		80/230	383-500-608
			299/399	383-500-609
9	Door Gasket replacement kit (not shown)		All	383-500-610
10	Flue pipe	3”	80/105	560-907-775
		3”	155	560-907-772
		4”	230–399	560-907-774

Replacement parts *(continued)*

Figure 132 Controls

Item	Description	Part Number
1	Ultra U-Control module	383-500-658
2	Transformer, 120V/24V	383-500-628
3	Display board assembly (includes plastic and display screen)	383-500-756
4	On/off power switch	383-500-205
5	Flue temperature sensor replacement kit	383-500-600
6	System temperature sensors (2 required)	383-500-601
7	Outdoor temperature sensor	510-312-218
8	Display to U-Control wire harness (not shown)	383-500-633
9	Line voltage wire harness (male) (not shown)	383-500-639
10	Low voltage wire harness (male) (not shown)	383-500-640
11	120 volt, 3-wire receptacle (not shown)	383-500-638
12	Ultra U-Control module fuses (not shown) F1 - 3-amp, fast-blow ATO (5 fuses) F2 - 12-amp, fast-blow AG (5 fuses)	 383-500-603 383-500-604
13	Jumper for low voltage terminal blocks, (5 jumpers) (not shown)	383-500-641
14	Ultra U-Control terminal block kit, (includes 1 high voltage terminal block, 6 low voltage terminal blocks, and U-Control screwdriver) (not shown)	383-500-642
15	24V LWCO kit with quick connect harness (not shown)	511-100-005

Replacement parts *(continued)*

Figure 133 Heat exchanger and piping — Ultra-80 and -105

Item	Description	Boiler Models	Part Number
1	Heat exchanger replacement kit - Heat exchanger, cover plate, burner, electrode, water sensors, compression fittings, condensate fitting, gaskets, and hardware	80 105	383-500-773 383-500-774
2	Cover plate replacement kit - Cover plate, cover plate gasket and hardware	80/105	383-501-022
3	Cover plate gasket/insulation	80/105	383-500-251
4	Burner gasket	80/105	590-300-000
5	Cover plate studs, M6, 1 pitch	All	560-340-598
6	Cover plate nuts, M6, 1 pitch	All	561-928-449
7	Water compression fitting, 28 mm	80–230	383-500-260
8	Water compression fitting, 22 mm	80/105	564-100-002
9	Supply water pipe assembly - Pipe, compression fitting & plugs	80/105	383-500-760
10	Return water pipe assembly - Pipe, drain valve (assembled) & compression fitting	80/105	383-500-761
11	Boiler drain valve, 3/4” NPT	All	511-246-392
12	Blower assembly kit - Blower, gasket, and hardware	80/105	383-501-027
13	Gas pipe	80/105	560-907-682
14	Flexible gas line	80/105	383-500-616
15	Gas Pipe lower pipe clamp and hardware	80/105	383-500-617
16	Gas valve/venturi kit - Gas valve, venturi, 90° elbow, gaskets, and hardware (assembled) (For LP boilers, make sure to reinstall the existing propane orifice)	80 105	383-501-029 383-501-030
17	Gasket cork, for in between gas valve venturi & burner inlet	All	590-317-310
18	Air silencer kit - Air silencer and gasket	80/105	383-501-026
19	Air silencer adapter kit - Air silencer adapter and hardware	80/105	383-501-025
20	Condensate trap kit - Condensate trap, hose clamps, pvc fittings, and gasket	80/105	383-501-031
21	Return/supply sensor kit - (1) sensor	All	383-500-602
22	Ignition electrode kit - Ignition electrode, suppressor, gasket, and hardware	All	383-500-045
	Ignition electrode gasket ONLY	All	511-330-253
23	Ignition cable kit (not shown) - Ignition cable, suppressor, and wire tie	All	383-500-619
24	Inspection glass kit - Bracket, glass, gasket and hardware	All	383-500-020
25	Burner replacement kit - Burner, gaskets and hardware	80NG 80LP 105	383-501-032 383-501-033 383-501-034
26	Gasket rubber, blower	80/105	590-300-003
27	Condensate fitting	80/105	561-200-000

Replacement parts *(continued)*

Figure 134 Heat exchanger and piping — Ultra-80 and -105

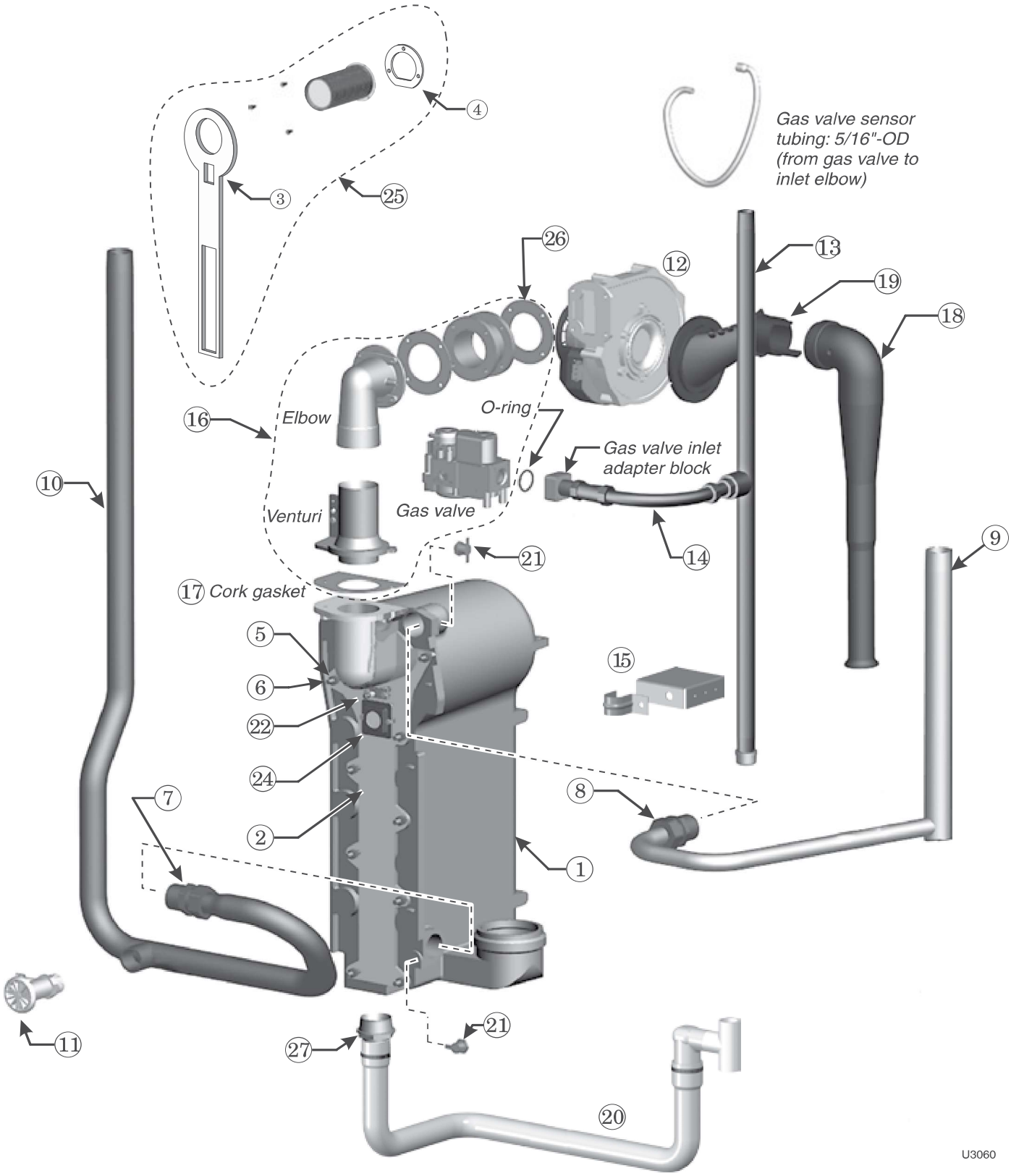

Replacement parts *(continued)*

Figure 135 Heat exchanger and piping
Ultra-155 & -230

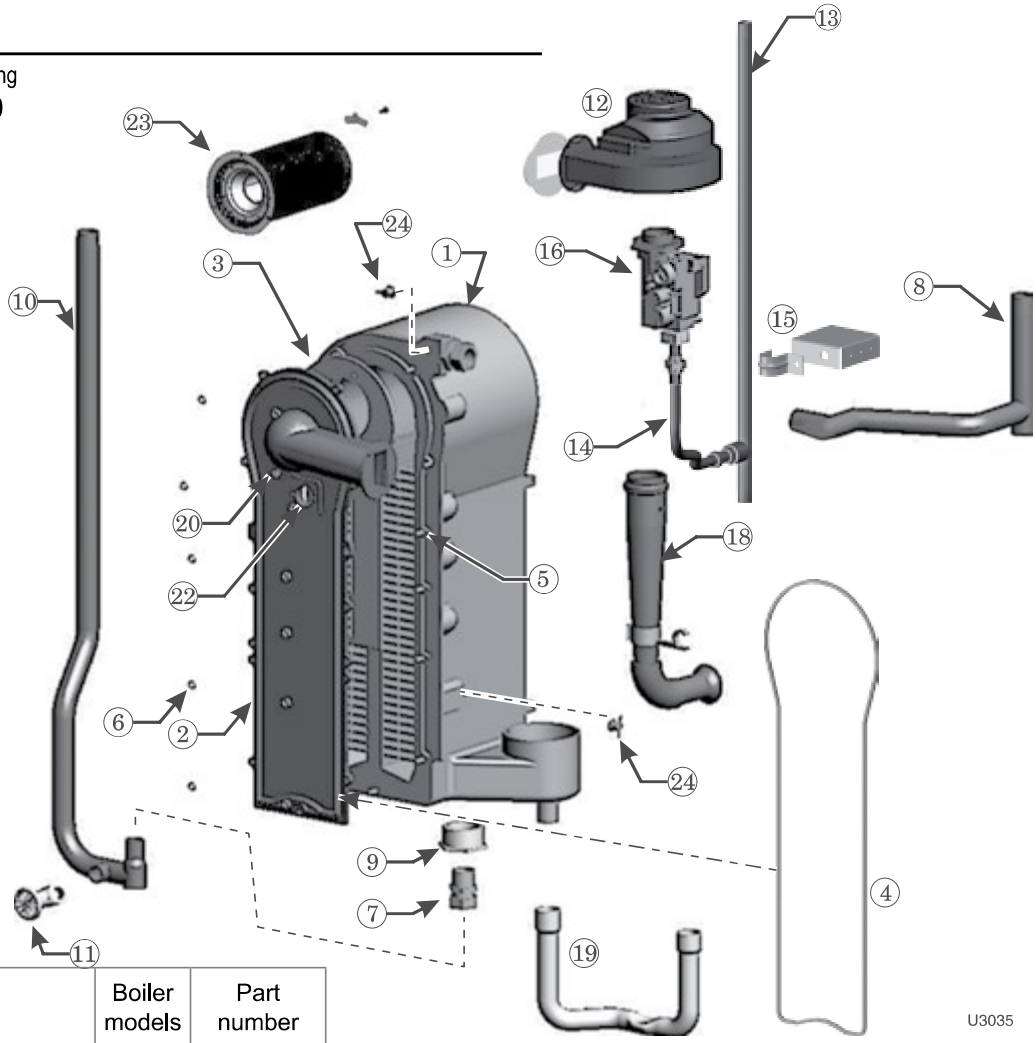

Item	Description	Boiler models	Part number
1	Heat exchanger replacement kit - Heat exchanger, cover plate, burner, electrode, water sensors, compression fittings, condensate fitting, gaskets, and hardware	155 230	383-500-775 383-500-776
2	Cover plate replacement kit - Cover plate, cover plate gasket, burner gasket, and hardware	155/230	383-500-395
3	Cover plate insulation	155/230	383-500-250
4	Cover plate gasket	155/230	383-500-255
5	Cover plate studs, M6, 1 pitch	All	560-340-598
6	Cover plate nuts, M6, 1 pitch	All	561-928-449
7	Water compression fitting, 28 mm	80–230	383-500-260
8	Supply water pipe assembly - Pipe & compression fitting & plugs	155/230	383-500-762
9	Return water bushing, 1 1/4" BSP x 1" BSP (not use on Ultra-299)	155/230	383-500-280
10	Return water pipe assembly - Pipe, drain valve, cap (assembled) & compression fitting	155/230	383-500-763
11	Boiler drain valve, 3/4" NPT	All	511-246-392
12	Blower assembly kit - Blower, gasket, and hardware	155 230	383-500-035 383-500-040
13	Gas pipe	155/230	560-907-683
14	Flexible gas line	155/230	383-500-767
15	Gas pipe lower clamp and hardware	155/230	383-500-617

Item	Description	Boiler models	Part number
16	Gas valve/venturi kit - Gas valve, venturi, adapter block, O-ring and hardware (assembled) be sure to reinstall the existing propane orifice)	155 230	383-500-025 383-500-030
17	Gasket cork, for in between gas valve venturi & blower inlet (not shown)	All	590-317-310
18	Air silencer kit - Air silencer and gasket	155/230	383-500-295
19	Condensate trap kit - Condensate trap, hose clamps, pvc fittings, and gasket	155/230	383-500-060
20	Ignition electrode kit - Ignition electrode, suppressor, gasket, and hardware	All	383-500-045
	Ignition electrode gasket ONLY (not shown)		511-330-253
21	Ignition cable kit (not shown) - Ignition cable, suppressor, and wire tie	All	383-500-619
22	Inspection glass kit - Bracket, glass, gasket and hardware	All	383-500-020
23	Burner replacement kit - Burner, gaskets and hardware	155 230	383-500-085 383-500-090
24	Return/supply sensor kit - (1) sensor	All	383-500-602

Replacement parts *(continued)*

Figure 136 Heat exchanger and piping **Ultra-299 & -399**

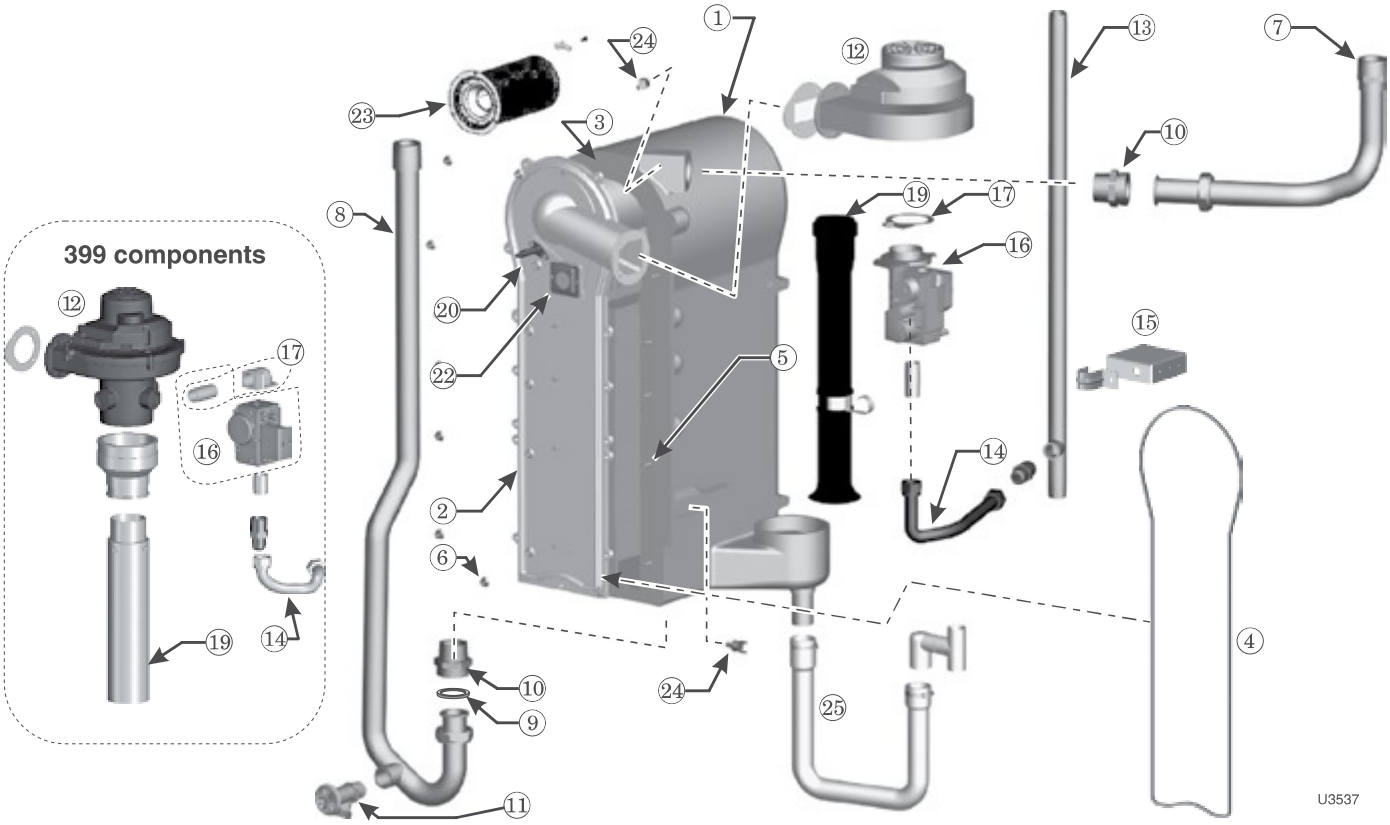

Item	Description	Boiler models	Part number
1	Heat exchanger replacement kit - Heat exchanger, cover plate, burner, electrode, water sensors, compression fittings, condensate fitting, gaskets, and hardware	299/399	383-500-777
2	Cover plate replacement kit - Cover plate, cover plate gasket, burner gasket, and hardware	299/399	383-500-395
3	Cover plate insulation	299/399	383-500-250
4	Cover plate gasket	299/399	383-500-255
5	Cover plate studs, M6, 1 pitch	All	560-340-598
6	Cover plate nuts, M6, 1 pitch	All	561-928-449
7	Supply water pipe assembly - Pipe & compression fitting & plugs	299/399	383-500-764
8	Return water pipe assembly - Pipe, drain valve, cap (assembled) & compression fitting	299/399	383-500-385
9	Supply/Return water piping square cut EPDM gasket (Ultra-299 only)	299/399	562-248-755
10	Fitting, double nipple for supply/return	299/399	561-326-828
11	Boiler drain valve, 3/4" NPT	All	511-246-392
12	Blower assembly kit - Blower, gasket, and hardware	299 399	383-500-360 383-500-650
13	Gas pipe	299/399	560-907-679
14	Flexible gas line	299/399	383-500-768

Item	Description	Boiler models	Part number
15	Gas pipe lower clamp and hardware	299	383-500-625
16	Gas valve/venturi kit - Gas valve, venturi	299	383-500-390
	Gas valve kit - Gas valve, venturi, adapter block, O-ring and hardware (assembled)	399	383-500-652
17	Gas valve outlet adapter/nipple kit	399	383-500-651
18	Gasket cork, for in between gas valve venturi & blower inlet	All	590-317-310
19	Air silencer kit - Air silencer and gasket	299 399	383-500-355 383-500-654
20	Ignition electrode kit - Ignition electrode, suppressor, gasket, and hardware	All	383-500-045
	Ignition electrode gasket ONLY		511-330-253
21	Ignition cable kit (not shown) - Ignition cable, suppressor, and wire tie	All	383-500-619
22	Inspection glass kit - Bracket, glass, gasket and hardware	All	383-500-020
23	Burner replacement kit - Burner, gaskets and hardware	299	383-500-407
24	Return/supply sensor kit - (1) sensor	All	383-500-602
25	Condensate trap kit - Condensate trap, hose clamps, pvc fittings, and gasket	299/399	383-500-626