KOHLER®

Bancroft™

One-light sconce

K-11421

Features

- Frosted-glass shade
- Sconce can be positioned up or down, depending on room setting
- Coordinates with other products in the Bancroft collection
- Includes installation hardware
- Suitable for damp locations, per UL 1598

Material

- Premium metal construction for durability and reliability
- KOHLER finishes resist corrosion and tarnishing

Codes/Standards

UL 1598
CSA C22.2 No. 250.0

KOHLER® Faucet Lifetime Limited Warranty

See website for detailed warranty information.

Available Colors/Finishes

Color tiles intended for reference only.

Color	Code	Description
	SNL	Polished Nickel
	BNL	Brushed Nickel
	BZL	Oil-Rubbed Bronze
	CPL	Polished Chrome

Bancroft™

One-light sconce

K-11421

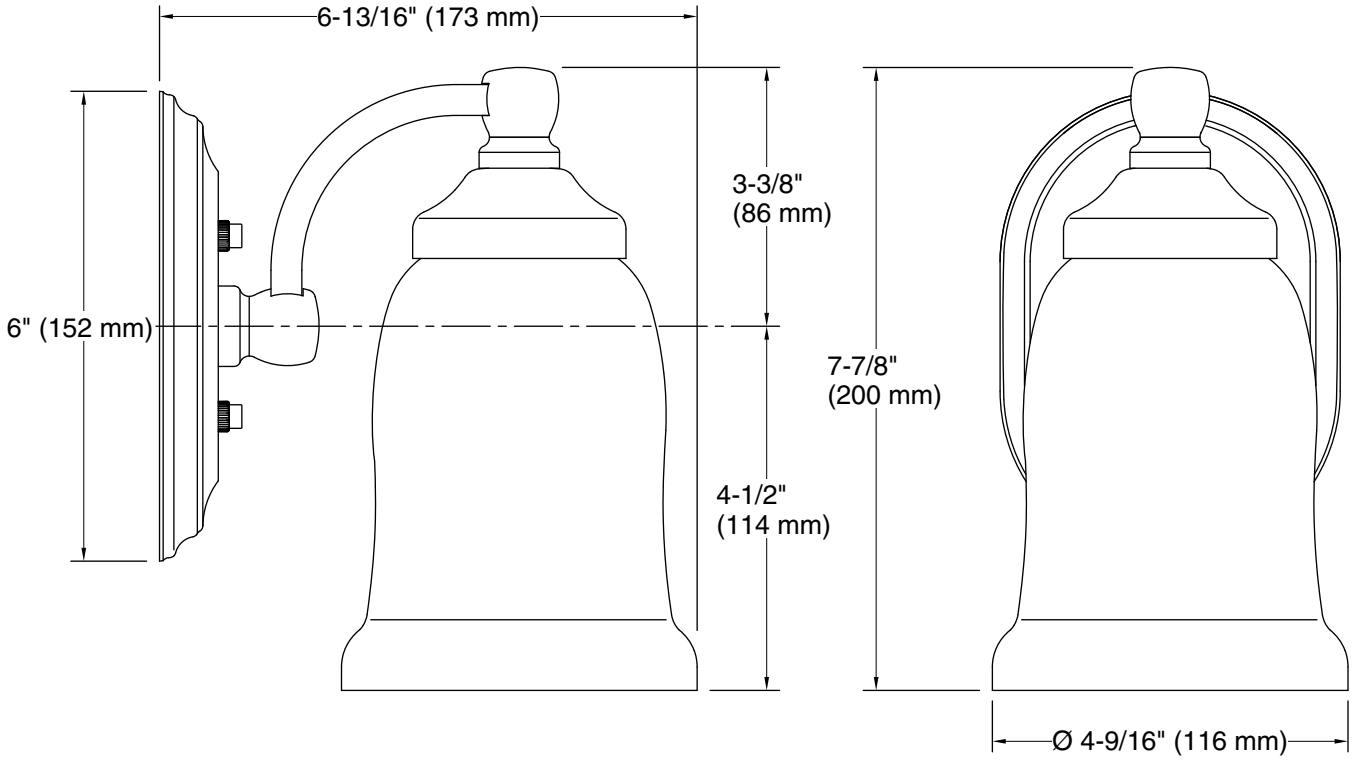

Technical Information

All product dimensions are nominal.

Installation Type:	Wall-mount
Material:	Metal, Glass
Number of Lights:	1

Notes

Install this product according to the installation guide.

THE BOLD LOOK OF KOHLER