CALEFFI

www.caleffi.com

MixCal™ Adjustable three-way thermostatic mixing valve

© Copyright 2020 Caleffi

521 series

INSTALLATION AND COMMISSIONING MANUAL

Function

The Caleffi MixCal™ three-way thermostatic mixing valve is used in systems producing domestic hot water or in hydronic and radiant heating systems. With the unique mixing chamber design, MixCal produces very stable mixed water temperture as inlet temperatures and pressures vary. Scale formation is minimized with anti-scale polymer sliding surfaces, preventing siezing or erratic mixed temperatures. O-ring seals made from durable peroxide-cured EPDM resist wear from common water treatment additives such as chlorine and chloramines.

Product range

521A Series Three-way thermostatic mixing valve:

"C" models include inlet check valves. "419, 519, 619" models include outlet gauge adapter. Connections: union thread NPT male, sizes ½", ¾", 1"; union sweat, sizes ½", ¾", 1"; union press, sizes ½" , ¾", 1"; union PEX crimp, sizes ½" , ¾", 1".

Technical Characteristics

Materials:	-Body:	low-lead brass (<0.25% lead content)
	-Shutter, seats and sliding guides:	PPO
	-Springs:	stainless steel
	-Seals:	peroxide-cured EPDM
Suitable fluids:		water, 30% max glycol solution
Setting range (outlet temperature):		85–150°F (30–65°C)
Tolerance:		±3°F (±2°C)
Max. working pressure (static):		200 psi (14 bar)
Max. operating differential pressure (dynamic):		75 psi (5 bar)
Max. recommended differential pressure:		20 psi (1.5 bar)
Max. hot water inlet temperature:		200°F (93°C)
Max. inlet pressure ratio (H/C or C/H) for optimum performance:		2:1
Min. temperature difference between hot water inlet and mixed water outlet for optimum performance:		27ºF (15ºC)
Min. flow rate to ensure optimal performance:		1.0 GPM (3.8 L/min)

Lay length, hot to cold inlet:	(½" & ¾" press connection)	3 5/8"
	(1" press connection)	4 1/8"

Certified to:

1. ASSE 1017/CSA B125.3, certified by ICC-ES, file PMG-1357
2. Complies with NSF/ANSI 372-2011, Drinking Water System Components-Lead Content Reduction of Lead in Drinking Water Act, California Health and Safety Code 116875 S.3874, Reduction of Lead in Drinking Water Act, as certified by ICC-ES, file PMG-1360.

ICC ES PMG LOW LEAD

ASSE 1017

Scan to view

521 MixCal™

Installation Tip

SAFETY INSTRUCTION

This safety alert symbol will be used in this manual to draw attention to safety related instructions. When used, the safety symbol means **ATTENTION! BECOME ALERT! YOUR SAFETY IS INVOLVED! FAILURE TO FOLLOW THESE INSTRUCTIONS MAY RESULT IN A SAFETY HAZARD.**

WARNING: This product can expose you to chemicals including lead, which is known to the State of California to cause cancer and birth defects or other reproductive harm. For more information go to www.P65Warnings.ca.gov.

CAUTION: All work must be preformed by qualified personnel trained in the proper application, installation, and maintenance of systems in accordance with all applicable codes and ordinances.

CAUTION: If the thermostatic mixing valve is not installed, commissioned and maintained properly, according to the instructions contained in this manual, it may not operate correctly and may endanger the user.

CAUTION: Make sure that all the connecting pipework is water tight.

CAUTION: When making the water connections, make sure that the pipwork connecting the MixCal thermostatic mixing valve is not mechanically overstressed. Over time this could cause breakages, with consequent water losses which, in turn, could cause harm to property and/or people.

CAUTION: Water temperatures higher than 100ºF (38ºC) can be dangerous. During the installation, commissioning and maintenance of the MixCal thermostatic mixing valve, take the necessary precautions to ensure that such temperatures do not endanger people.

CAUTION: To prevent any damage which will cause the electronic mixing valve to not operate correctly, treat highly aggressive water before entering the thermostatic mixing valve. Be sure water hardness is less than 10 grains.

CAUTION: If installed in an ASSE 1017 application, check valves shall be used.

LEAVE THIS MANUAL FOR THE USER.

CONSIGNE DE SÉCURITÉ

Ce symbole d'avertissement servira dans ce manuel à attirer l'attention sur la sécurité concernant instructions. Lorsqu'il est utilisé, ce symbole signifie.
ATTENTION! DEVENEZ ALERTE ! VOTRE SÉCURITÉ EST EN JEU ! NE PAS SUIVRE CES INSTRUCTIONS PEUT PROVOQUER UN RISQUE DE SECURITE.

AVERTISSEMENT: Ce produit peut vous exposer à des produits chimiques comme le plomb, qui est connu dans l'État de Californie pour causer le cancer, dommages à la naissance ou autre. Pour plus d'informations rendez-vous www.P65Warnings.ca.gov.

ATTENTION: Tous les travaux doivent être effectués par du personnel qualifié formé à la bonne application, installation et maintenance des systèmes conformément aux codes et règlements locaux.

ATTENTION: Si le réducteur de pression, termostatico regolabile, n'est pas installé, mis en service et entretenu correctement, selon les instructions contenues dans ce manuel, il peut ne pas fonctionner correctement et peut mettre en danger l'utilisateur.

ATTENTION: S'assurer que tous les raccordements sont étanches.

ATTENTION: Lorsque vous effectuez les raccordements d'eau, assurez-vous que la tuyauterie reliant le MixCal termostatico regolabile n'est pas mécaniquement des overstressed. Au fil du temps, ceci pourrait causer des ruptures, avec pour consequence des pertes en eau qui, à leur tour, peuvent causer des dommages à la propriété et/ou les gens.

ATTENTION: Les températures de l'eau supérieure à 100°F (38°C) peut être dangereux. Au cours de l'installation, mise en service et l'entretien de le réducteur de pression, le MixCal termostatico regolabile, prendre les precautions nécessaires afin de s'assurer que de tells températures ne compromettent pas les gens.

ATTENTION: Pour prévenir tout dommage qui provoque le mitigeur électronique à ne pas fonctionner correctement, le traitement de l'eau très agressive avant d'entrer dans le termostatico regolabile. Assurez-vous que la dureté de l'eau est inférieure à 10 grains.

ATTENTION: S'il est installé dans un pays de ASSE1017 application, vérifiez les robinets doivent être utilisés.

LAISSEZ CE MANUEL AVEC L'UTILISATEUR

Operating principle

The controlling element of the three-way thermostatic mixing valve is a thermostatic sensor fully immersed in the mixed water outlet tube which, as it expands or contracts, continuously establishes the correct proportion of hot and cold water entering the valve. The regulation of these flows is by means of a piston sliding in a cylinder between the hot and cold water passages. Even when there are pressure drops due to the drawing off of hot or cold water for other uses, or variations in the incoming temperature, the thermostatic mixing valve automatically regulates the water flow to obtain the required temperature.

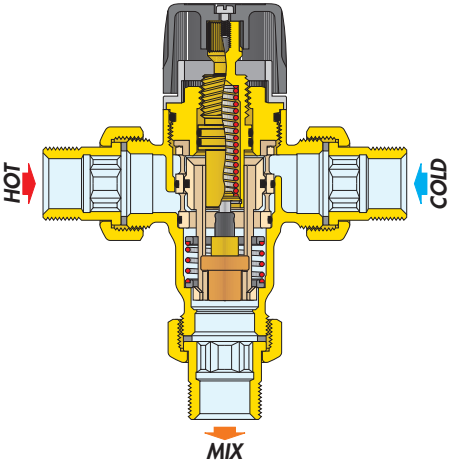

Inlet port check valve detail for 521 “AC” models

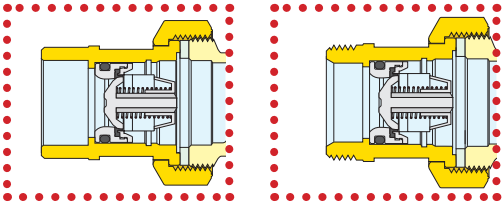

Flow curve

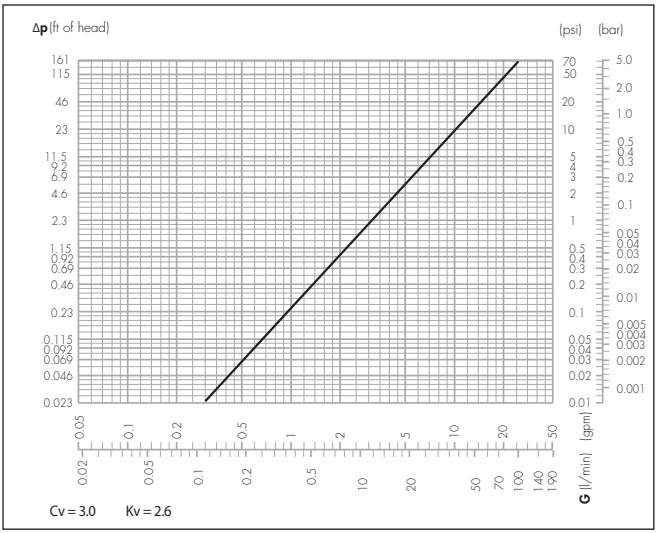

Flow should never exceed standards for pipe size and materials.

Use

Caleffi MixCal series 521 thermostatic mixing valves are designed to be installed at the hot water heater. The Caleffi Mix Cal series 521 valve cannot be used for tempering water temperature at fixtures as a point-of-use valve. They are not designed to provide scald protection or anti-chill service. They should not be used where ASSE 1070 devices are required. Wherever a scald protection feature is required, Caleffi series 5213 high performance mixing valve needs to be installed. For safety reasons, it is advisable to limit the maximum mixed water temperature to 120ºF.

Instantaneous production of hot water

Caleffi MixCal 521 series thermostatic mixing valves may be used with boilers or heaters providing instantaneous hot water as long as the heater is the type which is capable of modulating its output to handle low demand. A small amount of storage or piping length between the heat exchanger and mixing valve will improve stability of water delivery temperature.

Installation

NOTE TO INSTALLER: The Caleffi MixCal series 521 thermostatic mixing valve should be installed by qualified personnel, in accordance with local codes and ordinances. It is the responsibility of the installer to properly select, install and adjust this thermostatic mixing valve as specified in these instructions. Before installing a Caleffi MixCal series 521 thermostatic mixing valve, the system must be inspected to ensure that it's operating conditions are within the range of the thermostatic mixing valve checking, for example, the supply temperature, supply pressure, etc.

Systems where the Caleffi MixCal series 521 thermostatic mixing valve is to be installed must be drained and cleaned out to remove any dirt or debris which may have accumulated during installation. Failure to remove dirt or debris may affect performance and the manufacturer's product guarantee. The installation of filters of appropriate capacity at the inlet of the water from the mains supply is always advisable. In area which are subject to highly aggressive water, arrangements must be made to treat the water before it enters the valve.

Caleffi MixCal series 521 thermostatic mixing valves must be installed in accordance with the diagrams in this manual, taking into account all current applicable standards.

Caleffi Mix Cal series 521 thermostatic mixing valves can be installed in any position, either vertical or horizontal.

The following are shown on the mixer body:

– Hot water inlet, color red and marker "HOT".

– Cold water inlet, color blue and marker "COLD".

– Mixed water outlet, marker "MIX".

Locking the setting

Position the handle to the number required with respect to the index point. Unscrew the head screw, pull off the handle and reposition it so that the handle fits into the internal slot of the knob. Tighten the head screw.

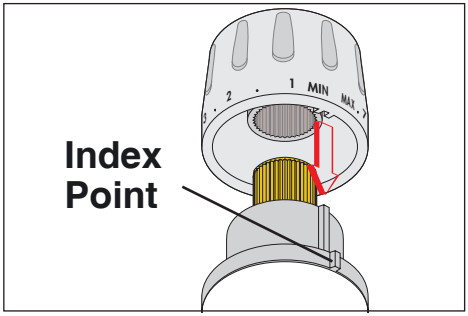

Check valves

In order to prevent undersirable backsiphonage, separate check valves should be installed in systems with code “521 A” model thermostatic mixing valves (these models do not contain integral check valves in the hot and cold inlet ports). As a convenience for easier installations, the Caleffi code “521 AC” model series thermostatic mixing valves include integral check valves in the hot and cold inlet ports.

NOTE TO INSTALLER: DO NOT TEST FIT OR INSTALL CHECK VALVES BEFORE SOLDERING. IF INSTALLED, REMOVAL WILL REQUIRE DAMAGING THE CHECK VALVE AND IT WILL NO LONGER BE USABLE.

The diagram below shows the order in which everything goes together. Note that the check valves are installed on the hot and cold inlets, the mixed outlet does not require a check valve. Note that the O-ring is installed on to the groove of the check valve.

After soldering the tailpieces into place, slide in the check valve into the tailpiece with o-ring going in first. It will click into place and then the screen will fit into the groove of the tailpiece with the domed end facing the mixing valve. Once the check valve and screen is installed, use the sealing washer between the tailpiece and mixing valve body to create a seal and tighten down the union nut.

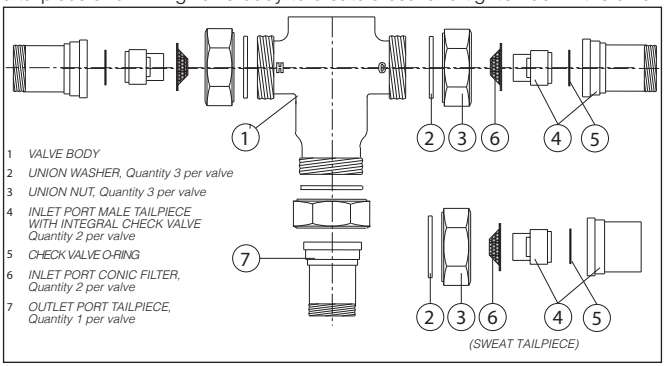

Commissioning

The special purpose of the thermostatic mixing valve must be commissioned in accordance with current standards by qualified personnel using temperature measuring equipment. Caleffi codes 521419A, 521519A, and 521619A with integral outlet port temperature gauges provide a time-saving temperature setting process to get close to the desired temperture. Use of a digital thermometer is recommended for determining the final setting of the mixed water temperature.

NOTE: Gauge adapters with 2” diameter, 20-210ºF scale, code NA10328 (1/2” sweat), NA10056 (3/4” sweat) or NA10058 (1” sweat) can be separately purchased and field installed to the Caleffi MixCal series 521 models sold without the integral gauge adapters.

After installation, the valve must be tested and commisioned in accordance with instructions given below, taking into account current applicable standards.

1) Ensure that the system is clean and free from dirt or debris before commissioning the thermostatic mixer.

2) It is recommended that the temperature is set using a suitable calibrated digital thermometer. The valve must be commissioned by measuring the temperature of the mixed water emerging at the point of use.

3) The maximum outlet temperature from the valve must be set taking account of the fluctuations due to simultaneous use. It is essential for these conditions to be stabilised before commissioning.

4) Adjust the temperature using the adjusting knob on the valve. For safety reasons. it is advisable to limit the maximum mixed water temperature to 120ºF in domestic hot water systems.

Temperature adjustment

The temperature is set to the required value by means of the knob with a graduated scale, on the top of the valve.

Pos.	Min.	1	2	3	4	5	6	7	Max.
T (°F)	81	90	100	111	120	127	136	145	152
T (°C)	27	32	38	44	49	53	58	63	67

with: T_{HOT} = 155°F (68°C), with: T_{cold} = 55°F (13°C), P = 43 psi (13 bar)

Application Diagrams

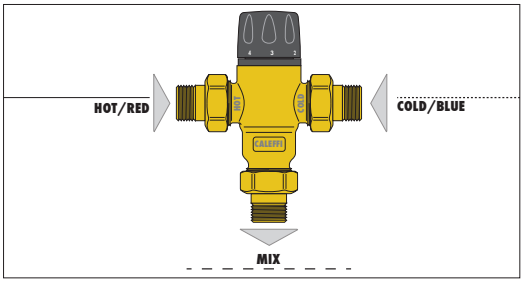

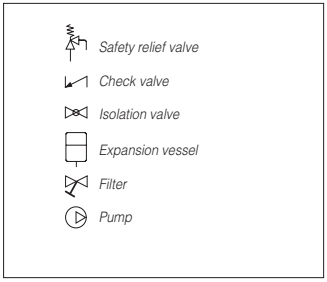

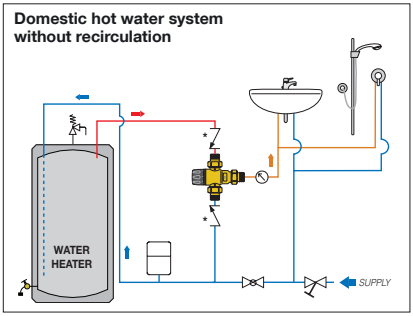

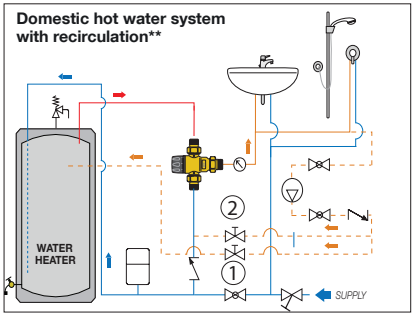

*MixCal series 521 thermostatic mixing valves with inlet check valves, “AC” models, can be used instead of separately installed check valves.

**Refer to principle of operation on page 8.

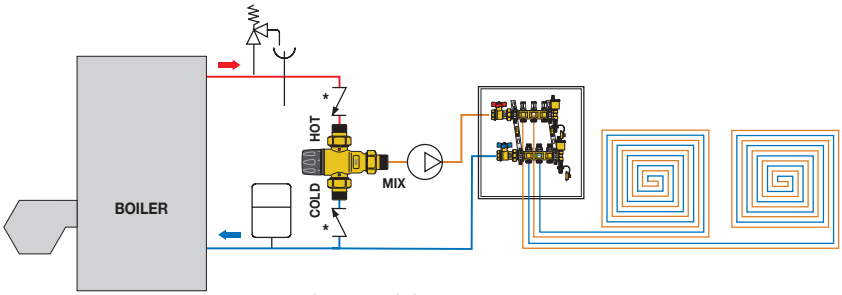

Radiant panels heating system

Recirculation with point-of-distribution thermostatic mixing valves

For domestic recirculating water systems, , that include a single ASSE 1017 point-of-distribution thermostatic mixing valve, such as the Caleffi MixCal 521 series, the piping installation in the application drawing on page 7 is recommended.

In any recirculating hot water distribution system there will be times when the circulator is operating, but no hot water is being drawn at the fixtures. Under this condition, heat continually dissipates from the piping forming the recirculation loop. If the loop is relatively short, and well insulated, the rate of heat loss should be very small. If the loop is long, and uninsulated, the rate of heat loss could be substantially greater.

To maintain the recirculating water at the desired delivery temperature the heat lost from the loop must be replaced. This requires some water flow between the loop and the hot water source. Ideally, this flow is adjusted so that the rate of heat transfer from the hot water source to the loop exactly balances the rate of heat loss from the loop's piping.

The figure (below) shows a "bypass valve" (1), and "return valve" (2), which regulate how much warm water from the return side of the recirculating loop flows back to the storage tank. When there is no demand for hot water at the fixtures, the flow of return water to the tank will equal the rate of hot water flow from the tank to the inlet port of the mixing valve. Ideally, this flow should be adjusted so that the rate of heat transfer from the tank to the recirculating loop exactly balances the rate of heat loss from the recirculating loop. This allows the water temperature leaving themixing valve to remain stable.

The bypass valve (1) and possibly the return valve (2) must be adjusted when there is no domestic water draw on the recirculating loop (when all the fixtures are off). Begin with the bypass valve (1) fully closed, and the return valve (2) fully open. Turn on the recirculating circulator and let it run for several minutes. The supply water temperature leaving the mixing valve will likely be lower than the setting of the valve, since there is no return flow to the tank thus, no hot water to the hot port of the mixing valve.

Slowly open the bypass valve (1) and monitor the temperature leaving the mixing valve. It will likely begin rising as some water returns to the tank, and an equal flow of hot water moves from the tank to the hot port of the mixing valve. When the temperature leaving the mixing valve remains stable, and is at or very close to the temperature set on the mixing valve, the bypass valve is correctly set.

The return valve (2) can remain fully open unless a situation occurs where the bypass valve (1) is fully open, but the temperature leaving the mixing valve is still too low. If this occurs, partially close the return valve (2) to add flow resistance. This forces more flow through the bypass valve (1). Repeat the previously described procedure of slowly opening the bypass valve (1) until the water temperature leaving the mixing valve is stable.

Replacement parts

Replacement body. Complies to requirements of NSF/ANSI 372-2016, low lead, as certified by ICC-ES, file PMG-1360. Certified to ASSE 1017/CSA B125.3 by ICC-ES, file PMG-1357.

ASSE 1017

521101A.....1" male union thread

Point of distribution mixed temperature gauge adaptor fits MixCal 521 series mixing valves. Threaded union mounting replaces existing mixed outlet with ¾" or 1" sweat pipe connection.

Removable gauge fits into temperature well. Gauge dial is 2" diameter and scale from 30—210° F.

NA10328.....½" sweat with gauge
NA10056.....¾" sweat with gauge
NA10058.....1" sweat with gauge
NA10358 .....1" union thread with gauge
688003A...Replacement gauge w/ pocket well
R39591..... Replacement gauge

Replacement fittings

Complete kit	Valve size	Connection	Union Nut	Tailpiece	Washer
NA20640	½ inch	NPT male	F61008	R31981	F50055
NA20640C				59893A	
NA20649		Sweat		NA10002	
NA20649C				59904A	
NA20646		Press	incl. w/ tailpc	NA16264	
NA20647		PEX crimp	F61008	F0000492	
NA20647A				NA10484	
NA20650	¾ inch	NPT male	F61008	31901A	F50055
NA20650C				59840A	
NA20659		Sweat		NA10003	
NA20659C				59905A	
NA20656		Press	incl. w/ tailpc	NA16264	
NA20656A			F0000698	NA10419	
NA20657		PEX crimp	F61008	F0000520	
NA20657A				NA10485	
NA20660	1 inch	NPT male	incl. w/ tailpc	59817A	F50055
NA20660C				59894A	
NA20669		Sweat		59834A	
NA20669C				59906A	
NA20666		Press		NA16266	
NA20667		PEX crimp	F61008	F0000521	
NA20667A				NA10486	

Troubleshooting

Under normal operating conditions the Caleffi 521 thermostatic mixing valve will provide a very high level of performance. However, in some circumstances, where the following maintenance schedule is not followed problems may arise.

Recommended maintenance schedule:

Tests should be conducted regularly to monitor the thermostatic mixing valve performance, as deterioration of performance could indicate that the valve and/or the system require maintenance. If, during these tests, the temperature of the mixed water has changed significantly in comparison with the previous test, the details given in the installation and commissioning sections should be checked and maintenance conducted.

The following should be checked regularly to ensure that the optimum performance levels of the valve are maintained. Check every 12 months at least, or more often if necessary.

1) Check and clean the system filters.

2) Check that any check valves positioned upstream of the Caleffi thermostatic mixing valve are operating correctly, without problems caused by impuritites.

3) Limescale can be removed from internal components of the thermostatic mixing valve by immersion in a suitable de-scaling fluid.

4) When the components which can be maintained have been checked, commission the valve.

Dimensions

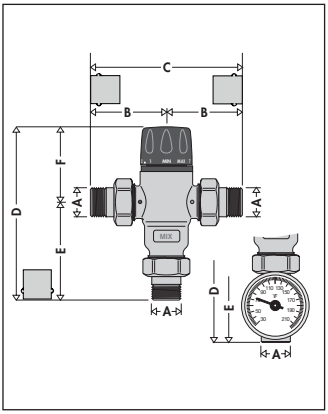

NPT male & Press connections

Laylength (press)

size ½ & ¾ inch: 3 5/8 "

size 1 inch: 4 1/8 "

**At minimum temperature position on adjusting knob.*

***Model with integral outlet temperature gauge.*

Code	A	B	C	D*	E	F
NPT Threaded connections						
521400A	½"	2⅝"	5¼"	6"	3⅜"	2⅝"
521400AC	½"	2⅝"	5¼"	6"	3⅜"	2⅝"
521410A**	½"	2⅝"	5¼"	7⅜"	4¾"	2⅝"
521410AC**	½"	2⅝"	5¼"	7⅜"	4¾"	2⅝"
521500A	¾"	2⅝"	5¼"	6"	3⅜"	2⅝"
521500AC	¾"	3"	6"	6"	3⅜"	2⅝"
521510A**	¾"	2⅝"	5¼"	8"	5⅜"	2⅝"
521510AC**	¾"	3"	6"	8"	5⅜"	2⅝"
521600A	1"	2⅞"	5¾"	6¼"	3¾"	2⅝"
521600AC	1"	3 1/16"	6⅛"	6¼"	3¾"	2⅝"
521610A**	1"	2⅞"	5¾"	7⅝"	5⅛"	2⅝"
521610AC**	1"	3 1/16"	6⅛"	7⅝"	5⅛"	2⅝"
Press connections						
521406A	½"	2 9/16"	5⅛"	6"	3⅜"	2⅝"
521416A**	½"	2 9/16"	5⅛"	8¼"	5⅝"	2⅝"
521506A	¾"	2 13/16"	5⅝"	8½"	5⅞"	2⅝"
521506AC	¾"	4 3/16"	8⅜"	6¼"	3⅝"	2⅝"
521516A**	¾"	2 13/16"	5⅝"	8½"	5⅞"	2⅝"
521516AC**	¾"	4 3/16"	8⅜"	8½"	5⅞"	2⅝"
521606A	1"	2 15/16"	5⅞"	6 5/16"	3 11/16"	2⅝"
521616A**	1"	2 15/16"	5⅞"	8⅝"	6"	2⅝"

Dimensions

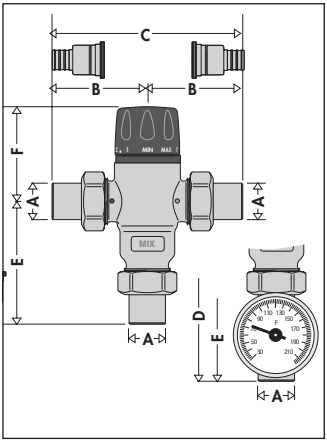

Sweat & PEX crimp connections

Code	A	B	C	D*	E	F
Sweat connections						
521409A	½"	2¼"	4½"	5⅝"	3⅛"	2⅝"
521419A**	½"	2¼"	4½"	7"	4½"	2⅝"
521409AC	½"	2⅞"	5¾"	5⅝"	3⅛"	2⅝"
521419AC**	½"	2⅞"	5⅞"	7"	4½"	2⅝"
521509A	¾"	2½"	5"	5 13/16"	3¼"	2⅝"
521519A**	¾"	2½"	5"	7 13/16"	5¼"	2⅝"
521509AC	¾"	3 1/16"	6⅛"	5 13/16"	3¼"	2⅝"
521519AC**	¾"	3 1/16"	6⅛"	7 13/16"	5¼"	2⅝"
521609A	1"	3 1/16"	6⅛"	6 7/16"	3⅞"	2⅝"
521619A**	1"	3 1/16"	6⅛"	7 13/16"	5¼"	2⅝"
521609AC	1"	3¼"	6½"	6 7/16"	3⅞"	2⅝"
521619AC**	1"	3¼"	6½"	7 13/16"	5¼"	2⅝"
PEX crimp connections						
521407A	½"	3¼"	6½"	6½"	4"	2⅝"
521417A**	½"	3¼"	6½"	6½"	4"	2⅝"
521407AC	½"	3¼"	6½"	6½"	4"	2⅝"
521417AC**	½"	3¼"	6½"	8¾"	6⅛"	2⅝"
521507A	¾"	3¼"	6½"	6½"	4"	2⅝"
521517A**	¾"	3¼"	6½"	6½"	4"	2⅝"
521507AC	¾"	3¼"	6½"	6½"	4"	2⅝"
521517AC**	¾"	3¼"	6½"	8¾"	6⅛"	2⅝"
521607A	1"	3¼"	6½"	6½"	4"	2⅝"
521617A**	1"	3¼"	6½"	6½"	4"	2⅝"
521607AC	1"	3¼"	6½"	6½"	4"	2⅝"
521617AC**	1"	3¼"	6½"	8¾"	6⅛"	2⅝"

**At minimum temperature position on adjusting knob.*

***Model with integral outlet temperature gauge.*

**At minimum temperature position on adjusting knob.*

***Model with integral outlet temperature gauge.*

Symptoms	Cause	Corrective action
Hot water at the cold taps	a) Operation of check valve is hindered; Check valve is not sealing correctly. b) Check valves not fitted.	- Replace faulty check valve
Fluctuating mixed water temperature	a) Erratic supply temperatures at the inlet of the valve. b) Starvation of the water supplies at the inlets of the valve. c) Incorrect commissioning of the valve.	- Restore inlet conditions within the limits of the valve.
Erratic flow of water from the valve	a) Insufficient water supplies b) Fluctuations in the supply pressures/temperatures. c) Adverse effect created by other draw off points on the system	- Stabilize inlet supply conditions.
No flow of water from the valve	a) In-line filers blocked. b) Insufficient supply pressures. c) Debris obstructing valve operation.	- Clean filters - Resore inlet supplies - Clean debris or scale from the valve.

CALEFFI
Hydronic Solutions
Caleffi North America, Inc.
3883 West Milwaukee Road
Milwaukee, WI 53208
T: 414.238.2360 F: 414.238.2366

8-24-20