KOHLER Faucets

# Tone™

Pull-down single-handle kitchen sink faucet

**K-23764**

## Features

- Three-function pull-down sprayhead with touch control allows you to switch between aerated stream, Sweep® spray, and Boost technology.
- Sweep® spray is a wide, powerful blade of water that sweeps your dishes and sink clean.
- Boost technology increases the flow rate by 30% with the press of a button. Use Boost with stream for faster filling or with Sweep® spray for more powerful cleaning.
- DockNetik® magnetic docking system securely locks the sprayhead into place when not in use.
- ProMotion® technology allows the pull-down sprayhead to swivel for more comfortable use.
- MasterClean™ sprayface features an easy-to-clean surface that withstands mineral buildup.
- High-arch spout offers vertical clearance for tall cookware and pitchers.
- Single lever handle makes adjusting water temperature easy with one hand.
- 1.5 gpm (5.7 lpm) maximum flow rate at 60 psi (4.14 bar).
- Temperature memory allows faucet to be turned on and off at the temperature set during prior usage.
- KOHLER ceramic disc valves exceed industry longevity standards for a lifetime of durable performance.

## Material

- Premium metal construction for durability and reliability.
- KOHLER finishes resist corrosion and tarnishing.

## Installation

- Single-hole installation (3-hole escutcheon sold separately).
- Flexible supply lines simplify installation.

## Adapters, Rough-in and Extension Kits

| | |
|---|---|
| 1327990 | Range: 2-1/2" (64 mm) - 4-5/8" (117 mm) |

## Recommended Products/Accessories

K-77685 Single-Cartridge Water Filtration System
K-77686 Double-Cartridge Water Filtration System
K-77687 single replacement filter cartridge
K-77688 Replacement Filter Cartridges, Two-Pack

## Optional Products/Accessories

K-24461 Three-hole kitchen faucet escutcheon

**ADA** | **CSA B651**

## Codes/Standards

ASME A112.18.1/CSA B125.1
NSF/ANSI 61
NSF/ANSI 372
All applicable US Federal and State material regulations
DOE - Energy Policy Act 1992
California Energy Commission (CEC)
ADA
ICC/ANSI A117.1
CSA B651

## KOHLER® Faucet Lifetime Limited Warranty

See website for detailed warranty information.

## Available Colors/Finishes

*Color tiles intended for reference only.*

| Color | Code | Description |
|---|---|---|
| | CP | Polished Chrome |
| | VS | Vibrant® Stainless |
| | BL | Matte Black |
| | 2MB | Vibrant® Brushed Moderne Brass |
| | BMB | Matte Black with Moderne Brass |
| | CBL | Matte Black with Polished Chrome |

KOHLER. Faucets

# Tone™

Pull-down single-handle kitchen sink faucet

**K-23764**

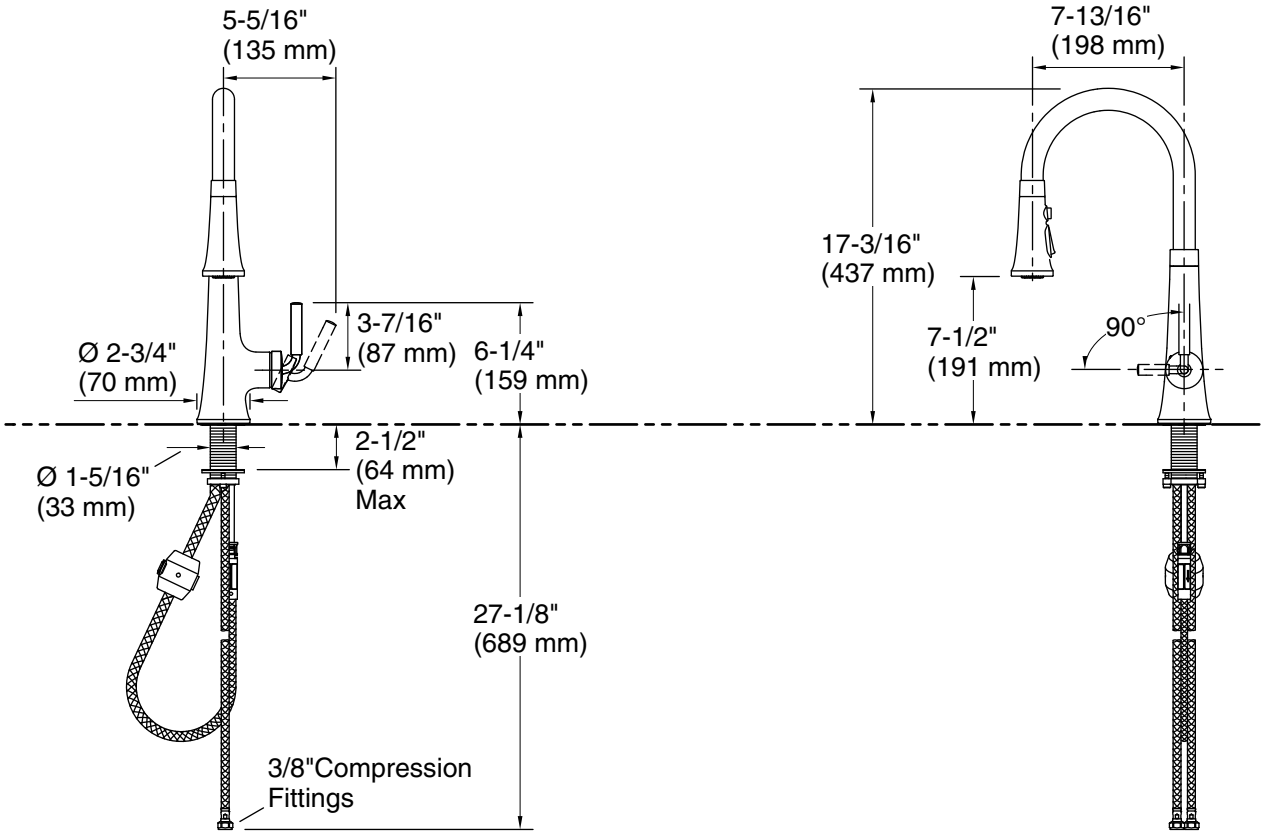


## Technical Information

All product dimensions are nominal.

### Spout:

Spout reach: 7-3/4" (198 mm)

## Notes

Install this product according to the installation instructions.

ADA complaint for faucet handles only.

ADA, CSA B651 compliant when installed to the specific requirements of these regulations.