KOHLER. Faucets

Jolt™

Pull-out kitchen sink faucet with two-function sprayhead

K-30612

Features

- Two-function pull-out sprayhead with touch-control allows you to switch from aerated stream to spray
- ProMotion® technology's light, quiet braided hose and ball-joint swivel make the pull-out sprayhead easier and more comfortable to use
- MasterClean™ sprayface features an easy-to-clean surface that withstands mineral buildup
- 7-1/2" (191 mm) rotating spout
- Single lever handle makes adjusting water temperature easy.
- Temperature memory allows faucet to be turned on and off at the temperature set during prior usage
- 1.5 gpm (5.7 lpm) maximum flow rate at 60 psi (4.14 bar)
- KOHLER ceramic disc valves exceed industry longevity standards for a lifetime of durable performance

Material

- Premium metal construction for durability and reliability
- KOHLER finishes resist corrosion and tarnishing

Installation

- Single- or three-hole installation (escutcheon included)
- Flexible supply lines simplify installation

Adapters, Rough-in and Extension Kits

1327990	Range: 2-1/2" (64 mm) - 4-5/8" (117 mm)

Recommended Products/Accessories

K-23723 Faucet cleaner

Optional Products/Accessories

1012715

ADA | **CSA B651**

Codes/Standards

ASME A112.18.1/CSA B125.1
NSF/ANSI/CAN 61
NSF/ANSI/CAN 372
All applicable US Federal and State material regulations
DOE - Energy Policy Act 1992
California Energy Commission (CEC)
ADA
ICC/ANSI A117.1
CSA B651

KOHLER® Faucet Lifetime Limited Warranty

See website for detailed warranty information.

KOHLER Faucets

Jolt™

Pull-out kitchen sink faucet with two-function sprayhead

K-30612

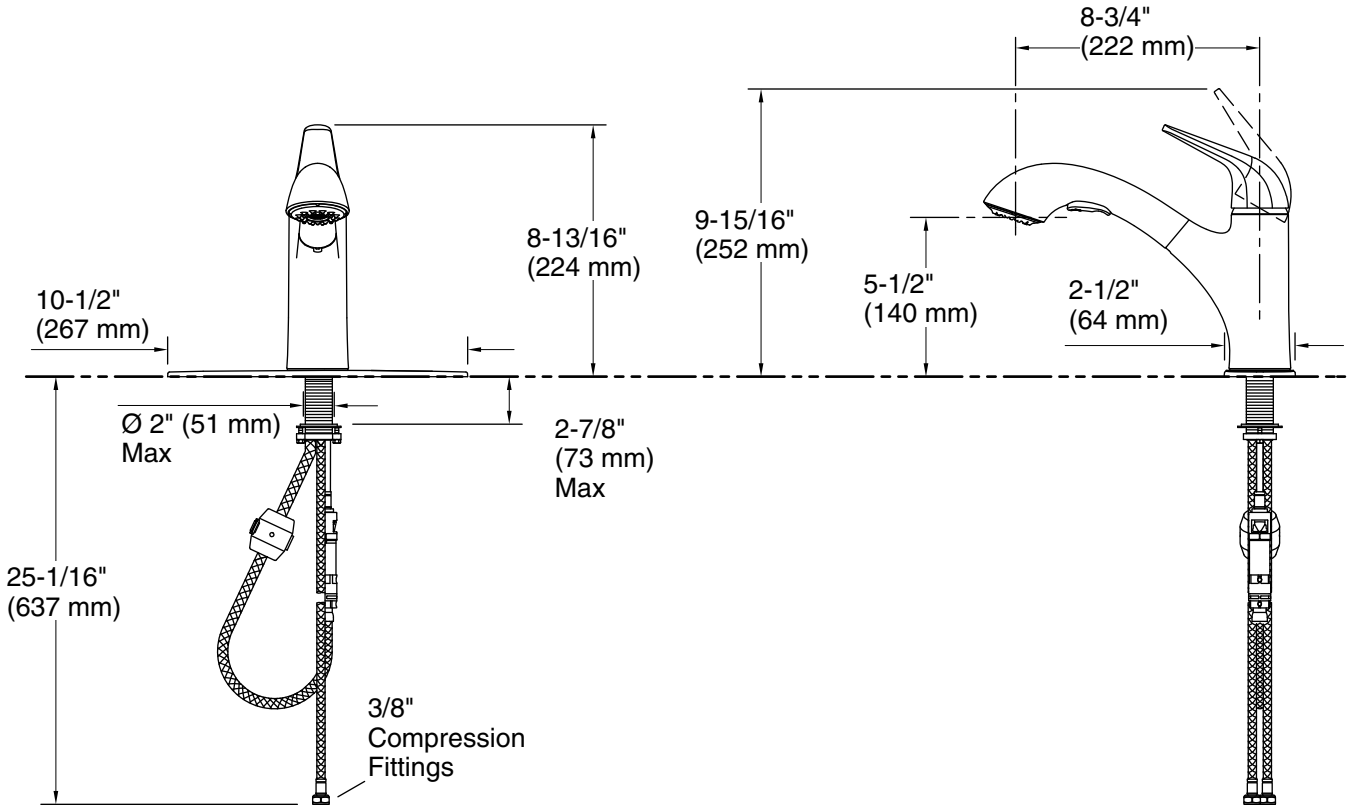

Technical Information

All product dimensions are nominal.

Drain included: No

Notes

ADA, CSA B651 compliant when installed to the specific requirements of these regulations.