Bosch BVA Series Air Handler
2-3-4-5 Ton Capacity

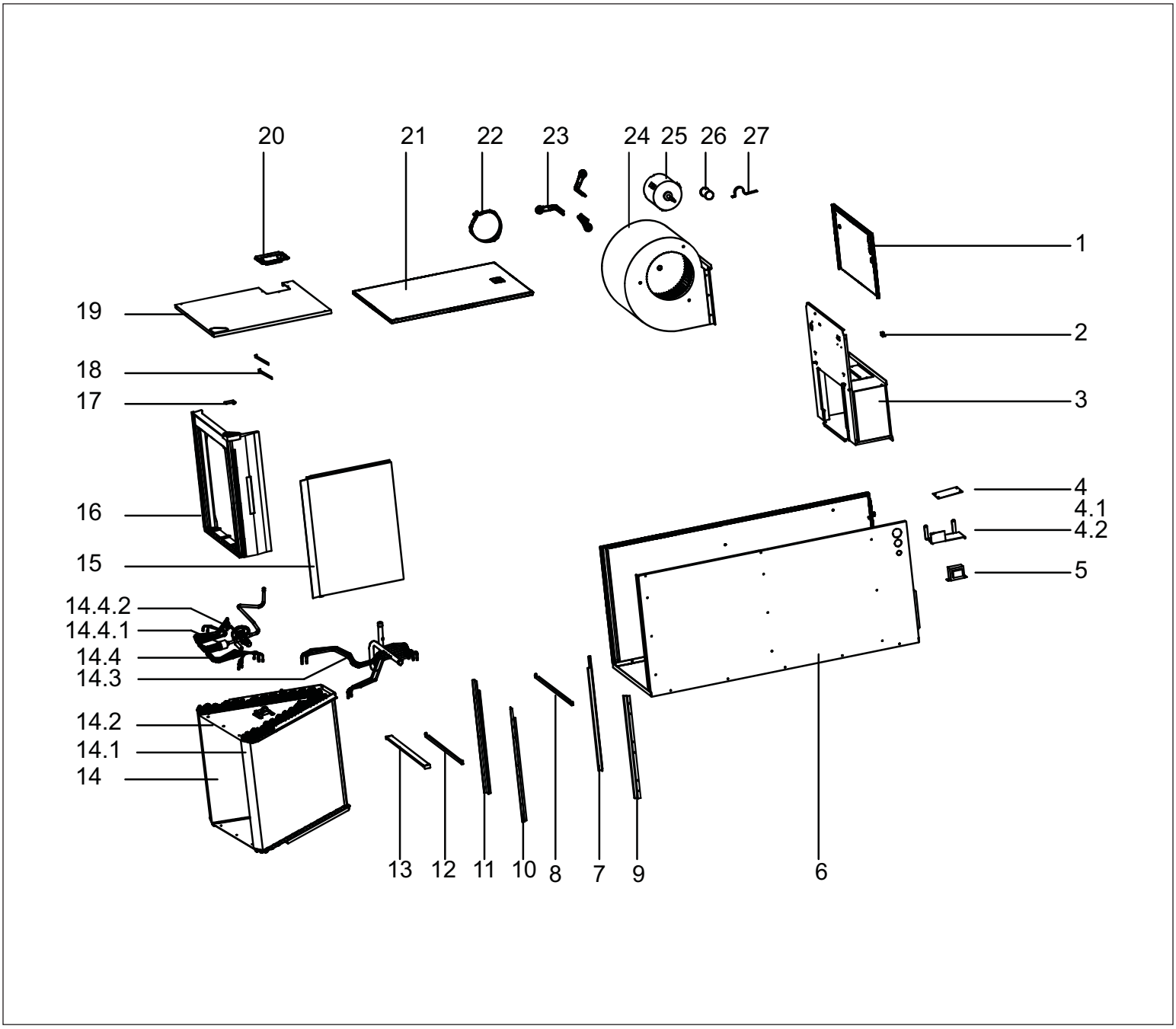

BOSCH

Bosch Thermotechnology Corp.
Tel: 1-866-642-3198 Fax: 1-954-776-5529
www.boschheatingandcooling.com

Pos.	Description	Qty	BVA 24 (2 Ton)	BVA 36 (3 Ton)	BVA 48 (4 Ton)	BVA 60 (5 Ton)	Recommended Stock	Remarks
1	Top Pan, Cabinet	1	8733941881	8733941881	8733941910	8733941910		
2	Ground Lug	1	8733941882	8733941882	8733941882	8733941882		
3	Duct, Discharge	1	8733941883	8733941933	8733941911	8733941911		
4	Main Control Board, Assy	1	8733941884	8733941884	8733941884	8733941884	✓	
4.1	Main Control Board	1	8733941885	8733941885	8733941885	8733941885		
4.2	Bracket, Mounting	1	8733941886	8733941886	8733941886	8733941886		
5	Transformer	1	8733941887	8733941887	8733941887	8733941887	✓	
6	Wrapper, Cabinet	1	8733941888	8733941888	8733941912	8733941912		
7	Downflow Coil Support (Right)	1	8733941889	8733941889	8733941913	8733941913		
8	Downflow Coil Support (Left)	1	8733941890	8733941890	8733941914	8733941914		
9	Support Bracket (Middle)	1	8733941891	8733941891	8733941915	8733941915		
10	Upflow Coil Support (Right)	1	8733941892	8733941892	8733941916	8733941916		
11	Upflow Coil Support (Left)	1	8733941893	8733941893	8733941917	8733941917		
12	Support Bracket (Lower)	1	8733941894	8733941894	8733941918	8733941918		
13	Cover, Filter	1	8733941895	8733941895	8733941919	8733941919		
14	Evaporator Assy	1	8733941896	8733941896	8733941928	8733941931	✓	
14.4.1	Distributor	1	8733941897	8733941897	8733941921	8733941921		
14.4.2	Expansion valve	1	8733941898	8733941898	8733941929	8733941932		
15	Drain Pan, Horizontal	1	8733941899	8733941899	8733941922	8733941922	✓	
16	Drain Pan, Vertical	1	8733941900	8733941923	8733941923	8733941923	✓	
17	Drain Pan Clamp	1	8733941901	8733941901	8733941901	8733941901		
18	Drain Pan Support	2	8733941902	8733941902	8733941902	8733941902		
19	Coil Door, Cabinet	1	8733941903	8733941903	8733941924	8733941924		
20	Plate, Refrig Line Access	1	8733941904	8733941904	8733941904	8733941904		
21	Blower Door, Cabinet	1	8733941905	8733941905	8733941925	8733941925		
22	Mounting Bracket, Motor	1	8733941906	8733941906	8733941906	8733941906		
23	Mounting Legs, Motor	3	8733941907	8733941907	8733941907	8733941907		
24	Blower Assy, Wrapper/Wheel	1	8733941908	8733941926	8733941926	8733941926		
25	Blower Motor	1	8733941909	8733941934	8733941930	8733941930	✓	

Bosch BVA Series Air Handler
2-3-4-5 Ton Capacity