Avid®
double robe hook
K-97500

Features
- Double robe hook provides convenient hanging storage of robes, towels, and other bath items.
- Coordinates with other products in the Avid collection.

Material
- Premium metal construction for durability and reliability.
- KOHLER finishes resist corrosion and tarnishing.

Installation
- Installation hardware included.

Recommended Products/Accessories
K-23723 Faucet cleaner

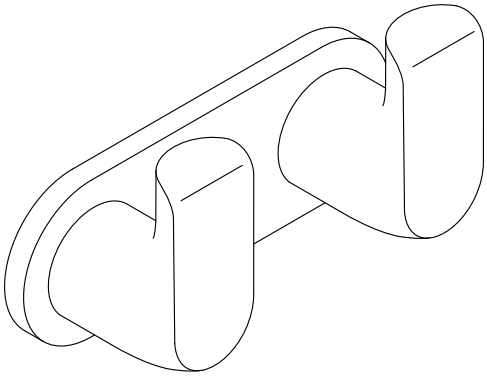

Codes/Standards
None Applicable

KOHLER® Faucet Lifetime Limited Warranty
See website for detailed warranty information.

Available Colors/Finishes
Color tiles intended for reference only.

Color	Code	Description
	CP	Polished Chrome
	BN	Vibrant® Brushed Nickel
	BL	Matte Black
	2MB	Vibrant® Brushed Moderne Brass

KOHLER®

Avid®
double robe hook
K-97500

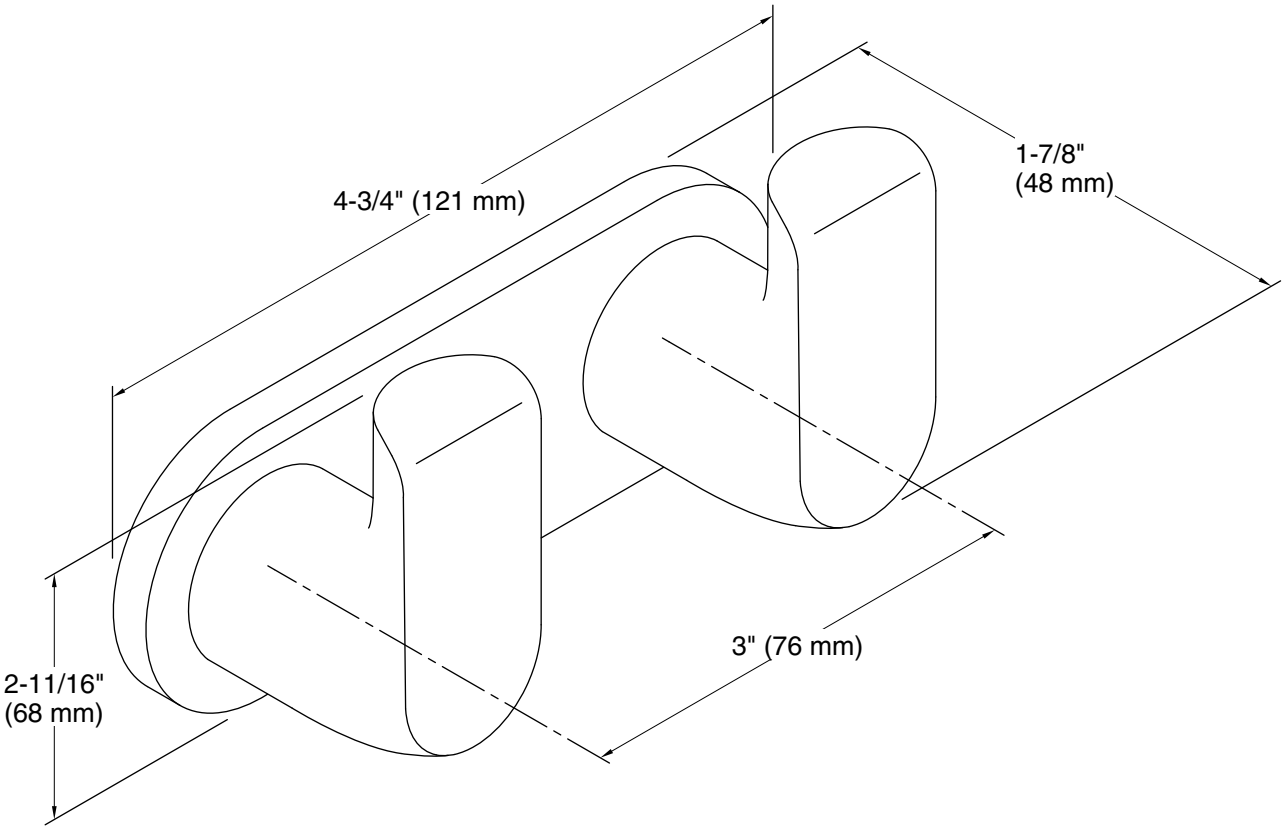

Technical Information
All product dimensions are nominal.

Material: Zinc

Notes
Install this product according to the installation instructions.

CAUTION: Risk of personal injury. Do not install these products in any area where they are likely to be used inadvertently as a grab bar or support bar. These products are not designed or intended for use as a grab bar or support bar.